[9.11~9.15절]

9.113 $r_1 = \frac{3}{4} r_2$

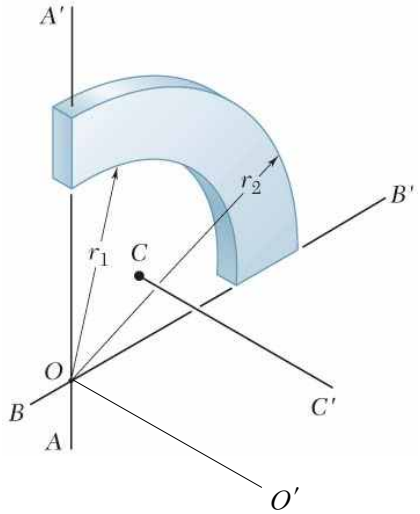

(a) $m = \rho\, t\, A = \rho\, t \left[\frac{1}{4}\pi\left(r_2^2 - r_1^2\right)\right]$

$$I^{mass} = \rho\, t\, I^{area} = \frac{4\,m}{\pi\left(r_2^2 - r_1^2\right)}\; I^{area}$$

$$I_{AA'}^{area} = \frac{\pi}{16}\left(r_2^4 - r_1^4\right)$$

$$I_{AA'}^{mass} = \frac{4\,m}{\pi\left(r_2^2 - r_1^2\right)}\,\frac{\pi}{16}\left(r_2^4 - r_1^4\right)$$

$$= \frac{m}{4}\left(r_2^2 + r_1^2\right)$$

$$= \frac{m}{4}\left[r_2^2 + \left(\frac{3}{4}r_2\right)^2\right] = \frac{25}{64}\,m\,r_2^2$$

(b) $I_{BB'}^{mass} = I_{AA'}^{mass}$

$$I_{OO'}^{mass} = I_{AA'}^{mass} + I_{BB'}^{mass} = 2\left(\frac{25}{64}\,m\,r_2^2\right) = \frac{25}{32}\,m\,r_2^2$$

centroid $\overline{Y} = \overline{X}$

$$\overline{X}\left(\frac{\pi}{4}r_2^2 - \frac{\pi}{4}r_1^2\right) = \frac{4\,r_2}{3\pi}\left(\frac{\pi}{4}r_2^2\right) - \frac{4\,r_1}{3\pi}\left(\frac{\pi}{4}r_1^2\right)$$

$$\Rightarrow\quad \overline{X}\,\frac{\pi}{4}\left(r_2^2 - r_1^2\right) = \frac{1}{3}\left(r_2^3 - r_1^3\right)$$

$$\Rightarrow\quad \overline{X} = \frac{4}{3\pi}\,\frac{\left(r_2^3 - r_1^3\right)}{\left(r_2^2 - r_1^2\right)} = \frac{4}{3\pi}\,\frac{\left[r_2^3 - \left(\frac{3}{4}r_2\right)^3\right]}{\left[r_2^2 - \left(\frac{3}{4}r_2\right)^2\right]} = \frac{4}{3\pi}\,\frac{r_2^3\left(\frac{37}{64}\right)}{r_2^2\left(\frac{7}{16}\right)} = \frac{37}{21\pi}\,r_2$$

$$\bar{r} = \sqrt{2}\;\overline{X} = \frac{37\sqrt{2}}{21\pi}\,r_2$$

$$I_{CC'}^{mass} = I_{OO'}^{mass} - m\,\bar{r}^2$$

$$= \frac{25}{32}\,m\,r_2^2 - m\left(\frac{37\sqrt{2}}{21\pi}\,r_2\right)^2$$

$$= (0.7813 - 0.6291)\;m\,r_2^2 = 0.1522\;m\,r_2^2$$

9.115 $m = \rho\, t\, A = \rho\, t\, a^2$

$\Rightarrow \quad \rho\, t = \dfrac{m}{a^2}$

$I = \rho\, t\, I^{area} = \dfrac{m}{a^2}\ I^{area}$

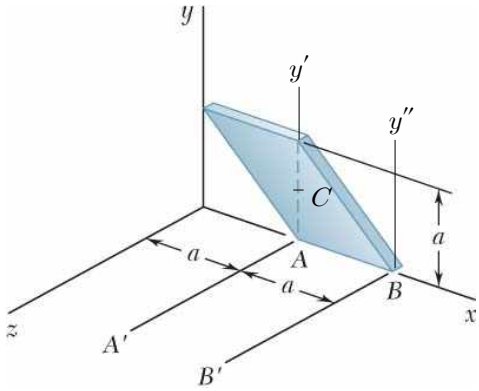

(a) 정사각형 $a \times a$에 대한 결과와 동일

$I_x^{area} = \dfrac{1}{3}(a)(a)^3 = \dfrac{1}{3}a^4$

$I_x = \dfrac{m}{a^2}\ I_x^{area} = \dfrac{m}{a^2}\ \dfrac{1}{3}a^4 = \dfrac{1}{3}m\,a^2$

(b) 도심 축 y'에 대해서

$\bar{I}_{y'}^{area} = 2\left[\dfrac{1}{12}(a)(a)^3\right] = \dfrac{1}{6}a^4$

$\bar{I}_{y'} = \dfrac{m}{a^2}\ I_{y'}^{area} = \dfrac{m}{a^2}\left(\dfrac{1}{6}a^4\right) = \dfrac{1}{6}m\,a^2$

$I_{y''} = \bar{I}_{y'} + m\,a^2 = \dfrac{1}{6}m\,a^2 + m\,a^2 = \dfrac{7}{6}m\,a^2$

$I_{BB'} = I_x + I_{y''} = \dfrac{1}{3}m\,a^2 + \dfrac{7}{6}m\,a^2 = \dfrac{3}{2}m\,a^2$

9.141 $\rho = 7{,}850\ \text{kg/m}^3$

$m = \rho\, V$ ① 원판, ② 원기둥, ③ 원판 구멍

$m_1 = \rho\, V_1$

$= (7{,}850\ \text{kg/m}^3)\ [\pi\ (0.08\ \text{m})^2\ (0.04\ \text{m})]$

$= 6.313\ \text{kg}$

$m_2 = \rho\, V_2$

$= (7{,}850\ \text{kg/m}^3)\ [\pi\ (0.02\ \text{m})^2\ (0.06\ \text{m})]$

$= 0.5919\ \text{kg}$

$m_3 = \rho\, V_3$

$= (7{,}850\ \text{kg/m}^3)\ [\pi\ (0.02\ \text{m})^2\ (0.04\ \text{m})] = 0.3946\ \text{kg}$

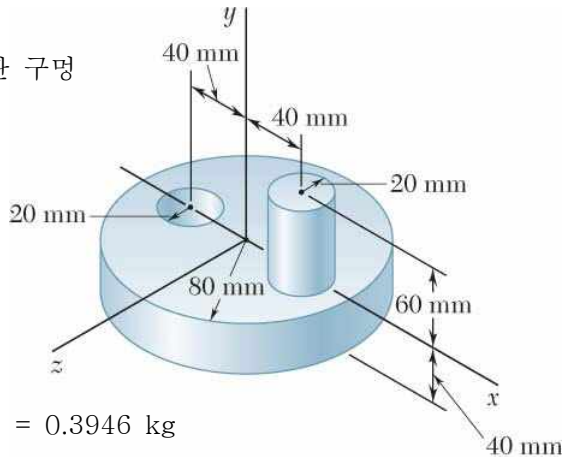

(a) $I_{x1} = \frac{1}{12} m_1 (3r_1^2 + 4L_1^2)$

$= \frac{1}{12}(6.313\ \text{kg})[3\ (0.08\ \text{m})^2 + 4\ (0.04\ \text{m})^2] = 13.467\times10^{-3}\ \text{kg·m}^2$

$I_{x2} = \frac{1}{12} m_2 (3r_2^2 + 4L_2^2)$

$= \frac{1}{12}(0.5919\ \text{kg})[3\ (0.02\ \text{m})^2 + 4\ (0.06\ \text{m})^2] = 0.7695\times10^{-3}\ \text{kg·m}^2$

$I_{x3} = \frac{1}{12} m_3 (3r_3^2 + 4L_3^2)$

$= \frac{1}{12}(0.3946\ \text{kg})[3\ (0.02\ \text{m})^2 + 4\ (0.04\ \text{m})^2] = 0.2499\times10^{-3}\ \text{kg·m}^2$

$I_x = I_{x1} + I_{x2} - I_{x3}$

$= [(13.467) + (0.7695) - (0.2499)]\times10^{-3}\ \text{kg·m}^2 = 13.9886\times10^{-3}\ \text{kg·m}^2$

$\Rightarrow \quad I_x = 13.99\times10^{-3}\ \text{kg·m}^2$

(b) $I_{y1} = \frac{1}{2} m_1 r_1^2$

$= \frac{1}{2}(6.313\ \text{kg})\ (0.08\ \text{m})^2 = 20.20\times10^{-3}\ \text{kg·m}^2$

$I_{y2} = \frac{1}{2} m_2 r_2^2 + m_2 d_2^2$

$= \frac{1}{2}(0.5919\ \text{kg})\ (0.02\ \text{m})^2 + (0.5919\ \text{kg})\ (0.04\ \text{m})^2 = 1.0654\times10^{-3}\ \text{kg·m}^2$

$I_{y3} = \frac{1}{2} m_3 r_3^2 + m_3 d_3^2$

$= \frac{1}{2}(0.3946\ \text{kg})\ (0.02\ \text{m})^2 + (0.3946\ \text{kg})\ (0.04\ \text{m})^2 = 0.7103\times10^{-3}\ \text{kg·m}^2$

$I_y = I_{y1} + I_{y2} - I_{y3}$

$= [(20.20) + (1.0654) - (0.7103)]\times10^{-3}\ \text{kg·m}^2 = 20.5551\times10^{-3}\ \text{kg·m}^2$

$\Rightarrow \quad I_y = 20.6\times10^{-3}\ \text{kg·m}^2$

(c) $I_{z1} = I_{x1} = 13.467\times10^{-3}\ \text{kg·m}^2$

$I_{z2} = \frac{1}{12} m_2 (3r_2^2 + 4L_2^2) + m_2 d_2^2$

$= (0.7695\times10^{-3}\ \text{kg·m}^2) + (0.5919\ \text{kg})\ (0.04\ \text{m})^2 = 1.7165\times10^{-3}\ \text{kg·m}^2$

$I_{z3} = \frac{1}{12} m_3 (3r_3^2 + 4L_3^2) + m_3 d_3^2$

$= (0.2499\times10^{-3}\ \text{kg·m}^2) + (0.3946\ \text{kg})\ (0.04\ \text{m})^2 = 0.88126\times10^{-3}\ \text{kg·m}^2$

$I_z = I_{z1} + I_{z2} - I_{z3}$

$= [(13.467) + (1.7165) - (0.88126)]\times10^{-3}\ \text{kg·m}^2 = 14.3022\times10^{-3}\ \text{kg·m}^2$

$\Rightarrow \quad I_z = 14.30\times10^{-3}\ \text{kg·m}^2$