[9.6~9.7절]

9.32&34 $A_1 = (5\ \text{cm})(6\ \text{cm}) = 30\ \text{cm}^2$

$A_2 = (4\ \text{cm})(2\ \text{cm}) = 8\ \text{cm}^2$

$A_3 = (4\ \text{cm})(1\ \text{cm}) = 4\ \text{cm}^2$

$A = A_1 - A_2 - A_3$

$= 30 - 8 - 4\ \text{cm}^2 = 18\ \text{cm}^2$

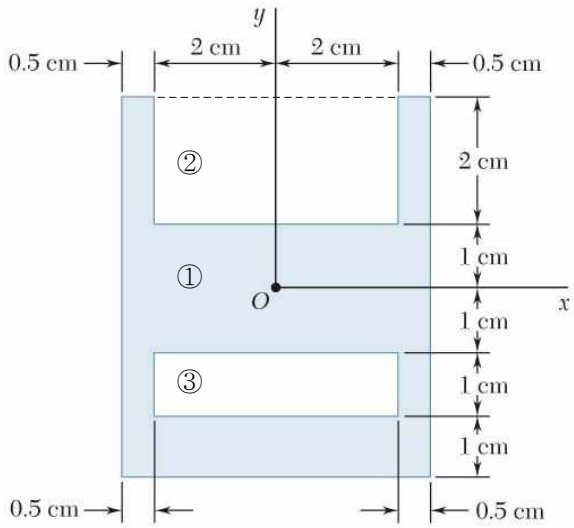

$I_{x1} = \frac{1}{12}(5\ \text{cm})(6\ \text{cm})^3 = 90\ \text{cm}^4$

$I_{x2} = \bar{I}_{x2} + A_2 d_2^2$

$= \frac{1}{12}(4\ \text{cm})(2\ \text{cm})^3 + (8\ \text{cm}^2)(2\ \text{cm})^2$

$= (\frac{8}{3} + 32)\ \text{cm}^4 = 34\frac{2}{3}\ \text{cm}^4$

$I_{x3} = \bar{I}_{x3} + A_3 d_3^2 = \frac{1}{12}(4\ \text{cm})(1\ \text{cm})^3 + (4\ \text{cm}^2)(\frac{3}{2}\ \text{cm})^2$

$= \frac{1}{3} + 9\ \text{cm}^4 = 9\frac{1}{3}\ \text{cm}^4$

$I_x = I_{x1} - I_{x2} - I_{x3}$

$= 90 - 34\frac{2}{3} - 9\frac{1}{3}\ \text{cm}^4 = 46.0\ \text{cm}^4$

$\Rightarrow \quad I_x = 46.0\ \text{cm}^4 = 46.0\times10^4\ \text{mm}^4$

$k_x = \sqrt{\frac{I_x}{A}} = \sqrt{\frac{46.0\ \text{cm}^4}{18\ \text{cm}^2}} = 1.599\ \text{cm} \quad \Rightarrow \quad k_x = 1.599\ \text{cm} = 15.99\ \text{mm}$

$I_{y1} = \frac{1}{12}(6\ \text{cm})(5\ \text{cm})^3 = 62\frac{1}{2}\ \text{cm}^4$

$I_{y2} = \frac{1}{12}(2\ \text{cm})(4\ \text{cm})^3 = 10\frac{2}{3}\ \text{cm}^4$

$I_{y3} = \frac{1}{12}(1\ \text{mm})(4\ \text{cm})^3 = 5\frac{1}{3}\ \text{cm}^4$

$I_y = I_{y1} - I_{y2} - I_{y3}$

$= 62\frac{1}{2} - 10\frac{2}{3} - 5\frac{1}{3}\ \text{cm}^4 = 46.5\ \text{cm}^4$

$\Rightarrow \quad I_y = 46.5\ \text{cm}^4 = 46.5\times10^4\ \text{mm}^4$

$k_y = \sqrt{\frac{I_y}{A}} = \sqrt{\frac{46.5\ \text{cm}^4}{18\ \text{cm}^2}} = 1.607\ \text{cm} \quad \Rightarrow \quad k_y = 1.607\ \text{cm} = 16.07\ \text{mm}$

9.42

<centroid 구하기>

symmetry ⇒ $\overline{X} = 0$

① 직사각형

$A_1 = (12\ \text{mm})(22\ \text{mm}) = 264\ \text{mm}^2$

$\bar{y} = \frac{1}{2}(22\ \text{mm}) = 11\ \text{mm}$

② 삼각형

$A_2 = \frac{1}{2}(24\ \text{mm})(18\ \text{mm}) = 216\ \text{mm}^2$

$\bar{y} = (22\ \text{mm}) + \frac{1}{3}(18\ \text{mm}) = 28\ \text{mm}$

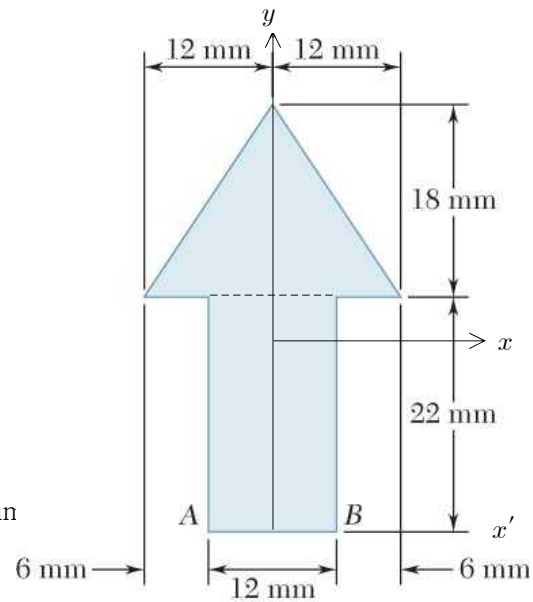

$\Sigma A = 264 + 216\ \text{mm}^2 = 480\ \text{mm}^2$

$\Sigma \bar{y} A = (11)(264) + (28)(216)\ \text{mm}^3 = 8{,}952\ \text{mn}$

$\overline{Y} = \frac{\Sigma \bar{y} A}{\Sigma A} = \frac{8{,}952\ \text{mm}^3}{480\ \text{mm}^2} = 18.65\ \text{mm}$

<moment of inertia 구하기>

$I_{y1} = \frac{1}{12}(22\ \text{mm})(12\ \text{mm})^3 = 3{,}168\ \text{mm}^4$

$I_{y2} = 2\ [\frac{1}{12}(18\ \text{mm})(12\ \text{mm})^3] = 5{,}184\ \text{mm}^4$

$I_y = I_{y1} + I_{y2} = 3{,}168 + 5{,}184\ \text{mm}^4 = 8{,}352\ \text{mm}^4$

$\Rightarrow \quad I_y = 8{,}350\ \text{mm}^4 = 8.35\times10^3\ \text{mm}^4$

$d_1 = \overline{Y} - \frac{b}{2} = (18.65\ \text{mm}) - \frac{1}{2}(22\ \text{mm}) = 7.65\ \text{mm}$

$I_{x1} = \bar{I}_{x1} + A_1 d_1^2 = \frac{1}{12}(12\ \text{mm})(22\ \text{mm})^3 + (264\ \text{mm}^2)(7.65\ \text{mm})^2 = 26{,}098\ \text{mm}^4$

$d_2 = [22\ \text{mm} + \frac{1}{3}(18\ \text{mm})] - \overline{Y} = 28 - 18.65\ \text{mm} = 9.35\ \text{mm}$

$I_{x2} = \bar{I}_{x2} + A_2 d_2^2 = \frac{1}{36}(24\ \text{mm})(18\ \text{mm})^3 + (216\ \text{mm}^2)(9.35\ \text{mm})^2 = 22{,}771\ \text{mm}^4$

$I_x = I_{x1} + I_{x2} = 26{,}098 + 22{,}771\ \text{mm}^4 = 48{,}869\ \text{mm}^4$

$\Rightarrow \quad I_x = 48{,}900\ \text{mm}^4 = 48.9\times10^3\ \text{mm}^4$