[5.10~5.11절]

5.103 ① 직사각판

$V = (3+2+2\ \text{cm})(2+2\ \text{cm})(0.75\ \text{cm})$

$= 21.0\ \text{cm}^3$

$\bar{y} = -\frac{1}{2}(0.75\ \text{cm}) = -0.375\ \text{cm}$

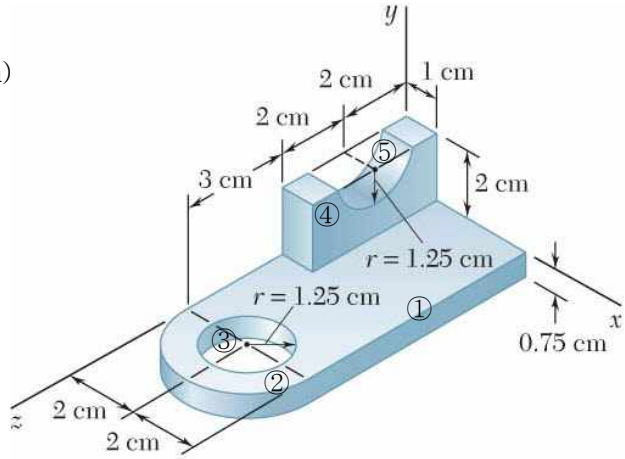

② 반원판

$V = \frac{1}{2}\pi(2\ \text{cm})^2\ (0.75\ \text{cm})$

$= 4.712\ \text{cm}^3$

$\bar{y} = -0.375\ \text{cm}$

③ 원판 구멍

$V = -\pi(1.25\ \text{cm})^2\ (0.75\ \text{cm})$

$= -3.682\ \text{cm}^3$

$\bar{y} = -0.375\ \text{cm}$

④ 직사각판

$V = (4\ \text{cm})(2\ \text{cm})(1\ \text{cm}) = 8.0\ \text{cm}^3$

$\bar{y} = \frac{1}{2}(2.0\ \text{cm}) = 1.0\ \text{cm}$

⑤ 반원판 구멍

$V = -\frac{1}{2}\pi(1.25\ \text{cm})^2\ (1\ \text{cm}) = -2.454\ \text{cm}^3$

$\bar{y} = (2.0\ \text{cm}) - \frac{4}{3\pi}(1.25\ \text{cm}) = 1.469\ \text{cm}$

$\Sigma V = 21.0 + 4.712 + (-3.682) + 8.0 + (-2.454)\ \text{cm}^3 = 27.58\ \text{cm}^3$

$\Sigma(\bar{y}V) = (-0.375)(21.0) + (-0.375)(4.712) + (-0.375)(-3.682) + (1.0)(8.0)$
$+ (1.469)(-2.454)\ \text{cm}^4 = -3.866\ \text{cm}^4$

$\bar{Y} = \frac{\Sigma(\bar{y}V)}{\Sigma V} = \frac{-3.866\ \text{cm}^4}{27.58\ \text{cm}^3} = -0.14018\ \text{cm} \quad \Rightarrow \quad \bar{Y} = -0.1402\ \text{cm}$

5.107 대칭면 $\overline{X}$ = 125 mm

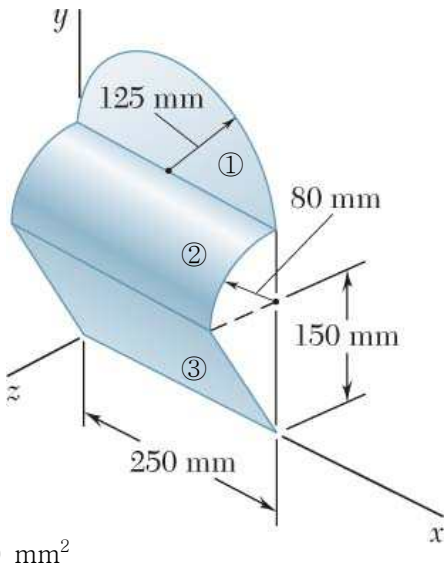

① $A = \frac{1}{2}\pi(125\ \text{mm})^2 = 24{,}544\ \text{mm}^2$

$\bar{y} = (150\ \text{mm}) + (80\ \text{mm}) + \frac{4}{3\pi}(125\ \text{mm})$

$= 283.1\ \text{mm}$

$\bar{z} = 0$

② $A = \frac{1}{2}\pi(80\ \text{mm})(250\ \text{mm}) = 31{,}416\ \text{mm}^2$

$\bar{y} = (150\ \text{mm}) + \frac{2}{\pi}(80\ \text{mm}) = 200.9\ \text{mm}$

$\bar{z} = \frac{2}{\pi}(80\ \text{mm}) = 50.93\ \text{mm}$

③ $A = \sqrt{(150\,\text{mm})^2 + (80\,\text{mm})^2}\ (250\ \text{mm}) = 42{,}500\ \text{mm}^2$

$\bar{y} = \frac{1}{2}(150\ \text{mm}) = 75.0\ \text{mm}$

$\bar{z} = \frac{1}{2}(80\ \text{mm}) = 40.0\ \text{mm}$

$\Sigma A = 24{,}544 + 31{,}416 + 42{,}500\ (\text{mm}^2) = 98{,}460\ \text{mm}^2$

$\Sigma(\bar{y}A) = (283.1)(24{,}544) + (200.9)(31{,}416) + (75.0)(42{,}500) = 16{,}447{,}381\ \text{mm}^3$

$\Sigma(\bar{z}A) = (0)(24{,}544) + (50.93)(31{,}416) + (40.0)(42{,}500) = 3{,}300{,}016\ \text{mm}^3$

$$\overline{Y} = \frac{\Sigma(\bar{y}A)}{\Sigma A} = \frac{16{,}447{,}381\ \text{mm}^3}{98{,}460\,\text{mm}^2} = 167.04\ \text{mm}$$

$$\overline{Z} = \frac{\Sigma(\bar{z}A)}{\Sigma A} = \frac{3{,}300{,}016\ \text{mm}^3}{98{,}460\ \text{mm}^2} = 33.51\ \text{mm}$$

중심 = (125.0 mm, 167.0 mm, 33.5 mm)

5.117 ① $L = 0.4$ m

$\bar{x} = 0.6$ m, $\bar{y} = 0$,

$\bar{z} = \frac{1}{2}(0.4\text{ m}) = 0.2$ m

② $L = 0.6$ m

$\bar{x} = \frac{1}{2}(0.6\text{ m}) = 0.3$ m

$\bar{y} = 0$, $\bar{z} = 0.4$ m

③ $L = 1.0$ m

$\bar{x} = 0.6$ m

$\bar{y} = \frac{1}{2}(1.0\text{ m}) = 0.5$ m, $\bar{z} = 0$

④ $L = 1.0$ m

$\bar{x} = 0.6$ m, $\bar{y} = 0.5$ m, $\bar{z} = 0.4$ m

⑤ $L = (1+0.6)$ m $= 1.6$ m

$\bar{x} = 0$, $\bar{y} = \frac{1}{2}(1.6\text{ m}) = 0.8$ m

$\bar{z} = 0.4$ m

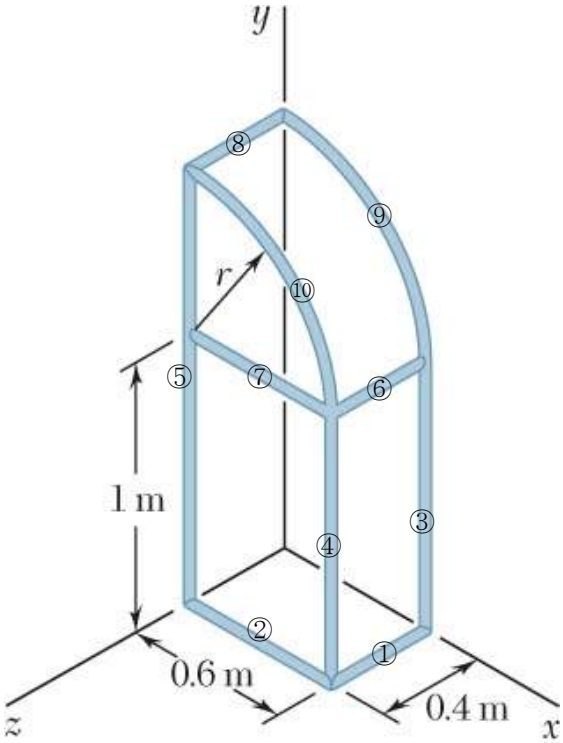

⑥ $L = 0.4$ m

$\bar{x} = 0.6$ m, $\bar{y} = 1.0$ m, $\bar{z} = 0.2$ m

⑦ $L = 0.6$ m

$\bar{x} = 0.3$ m, $\bar{y} = 1.0$ m, $\bar{z} = 0.4$ m

⑧ $L = 0.4$ m

$\bar{x} = 0$, $\bar{y} = 1.6$ m, $\bar{z} = 0.2$ m

⑨ $L = \frac{1}{4}[2\pi(0.6\text{ m})] = 0.9424$ m

$\bar{x} = \frac{2}{\pi}(0.6\text{ m}) = 0.382$ m, $\bar{y} = (1+0.3820)$ m $= 1.382$ m, $\bar{z} = 0$

⑩ $L = L⑨ = 0.9424$ m

$\bar{x} = \bar{x}⑨ = 0.382$ m, $\bar{y} = \bar{y}⑨ = 1.382$ m, $\bar{z} = 0.4$ m

$\Sigma L = 0.4 + 0.6 + 1.0 + 1.0 + 1.6 + 0.4 + 0.6 + 0.4 + 0.943 + 0.943$ m
$= 7.886$ m

$\Sigma(\bar{x}L) = (0.4)(0.6) + (0.6)(0.3) + (1.0)(0.6) + (1.0)(0.6) + (1.6)(0) + (0.4)(0.6)$
$+ (0.6)(0.3) + (0.4)(0) + (0.943)(0.382) + (0.943)(0.382)$ m^2 $= 2.760$ m^2

$\Sigma(\bar{y}L) = (0.4)(0) + (0.6)(0) + (1.0)(0.5) + (1.0)(0.5) + (1.6)(0.8) + (0.4)(1.0)$
$+ (0.6)(1.0) + (0.4)(1.6) + (0.943)(1.382) + (0.943)(1.382)$ m^2 $= 6.526$ m^2

$\Sigma(\bar{z}L) = (0.4)(0.2) + (0.6)(0.4) + (1.0)(0) + (1.0)(0.4) + (1.6)(0.4) + (0.4)(0.2)$
$+ (0.6)(0.4) + (0.4)(0.2) + (0.943)(0) + (0.943)(0.4)$ m^2 $= 2.137$ m^2

$\bar{X} = \frac{\Sigma(\bar{x}L)}{\Sigma L} = \frac{2.760\text{ m}^2}{7.886\text{ m}} = 0.350$ m $\Rightarrow$ $\bar{X} = 0.350$ m

$\bar{Y} = \frac{\Sigma(\bar{y}L)}{\Sigma L} = \frac{6.526\text{ m}^2}{7.886\text{ m}} = 0.828$ m $\Rightarrow$ $\bar{Y} = 0.828$ m

$\bar{Z} = \frac{\Sigma(\bar{z}L)}{\Sigma L} = \frac{2.137\text{ m}^2}{7.886\text{ m}} = 0.271$ m $\Rightarrow$ $\bar{Z} = 0.271$ m

center of gravity = (0.350 m, 0.828 m, 0.271 m)